CSUN®
energy for today

CSUN Solar Energy Solutions

GLOBAL SUPPLY CHAIN HIGH-TECH YOUR SAFE CHOICE

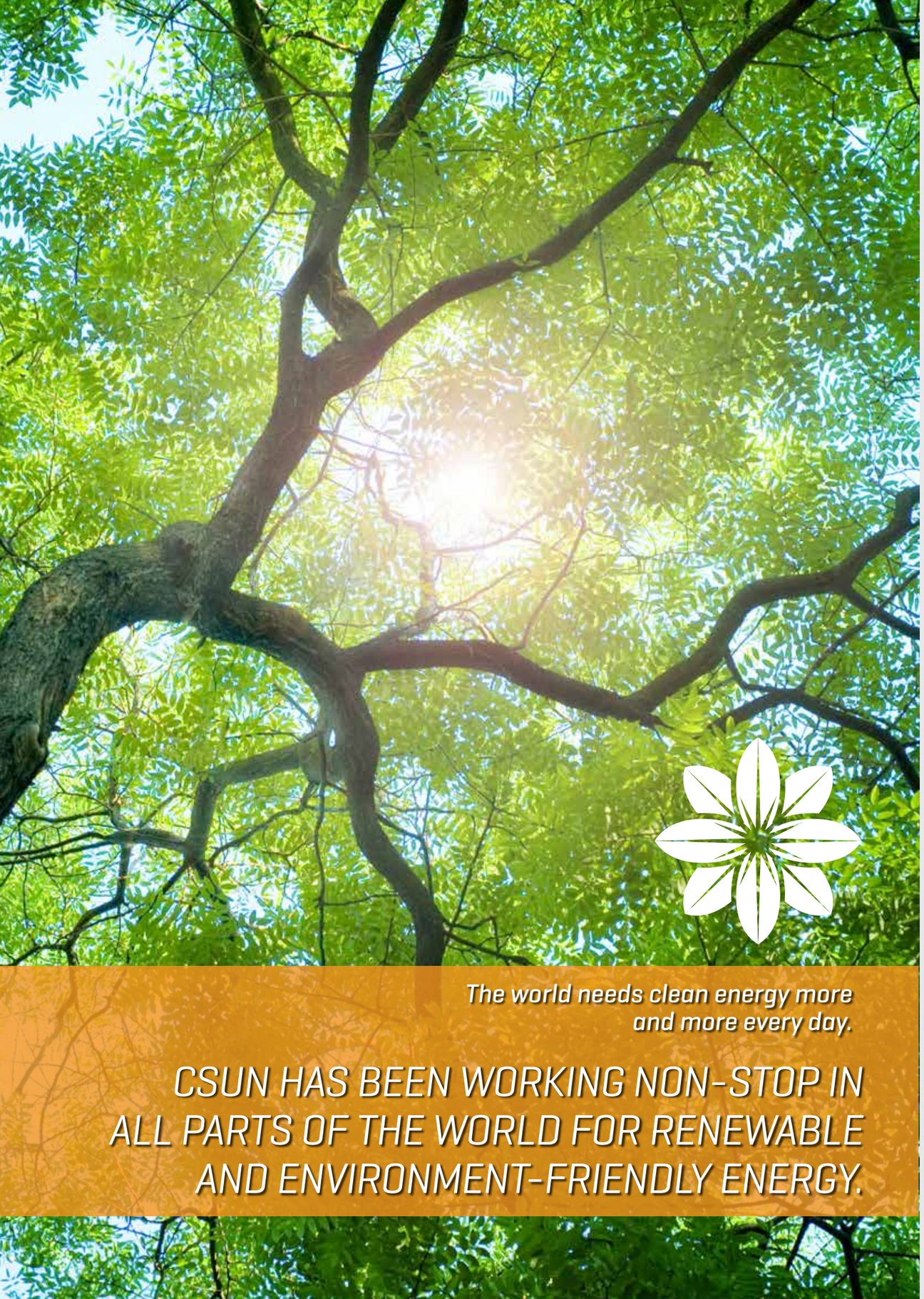

CONTENTS

The CSUN World 04

About CSUN 06

CSUN Milestones 08

Why CSUN 10

Production Power 11

Certificates 12

Performance 13

Products 14

References 24

GLOBAL PRESENCE

CSUN Plants

CSUN Sales Offices

In addition to the production plants in Turkey, China, the USA, South Korea and Vietnam, we provide products to our customers in a fast and easy way through our warehouse in the Netherlands. You can contact our business partners in Germany, France, Italy, the UK, South Africa, China, Thailand, Japan, Australia and the USA through our local offices or representatives.

ABOUT CSUN

CSUN is part of the world energy giant CEEG (China Electric Equipment Group) and started to offer services through strategic partnership with renowned global companies such as KME and DuPont. Today, CSUN is one of the largest producers of solar cells and panels in the world.

As a company providing cells to solar panel producers in different parts of the world including Europe, CSUN established its own solar panel production plant in 2007 and became one of the leading panel producers in the world. CSUN has sold more than 5 GW of solar panels worldwide to date based on its international experience and know-how and has thus been awarded the "Tier-1" level in the "BNEF" Solar Panel Producers List.

CSUN has broken a world record in this field by producing silicon solar cells with 25% efficiency as a result of long years of R&D studies.

CSUN MILESTONES

2004

China Sunenergy Co. Ltd. was established as a subsidiary of China Electric Equipment Group (CEEG).

2005

The first production line of 32 MW was commissioned

2006

CSUN became the leading photovoltaic company in the world after the solar cell production capacity was increased to 192 MW

2007

CSUN's partner company China Electric Equipment Group (CEEG) constructed 2 solar panel plants and entered the PV market

2008

The Headquarter in Germany was established. The production of the Selective Emitter (SE) technology made CSUN the leading company in the world in this sector. The cell production capacity increased to 320 MW.

2010

CSUN acquired 2 solar panel plants of CEEG and started to produce solar panels. The cell production capacity increased to 400 MW and the panel production capacity increased to 480 MW.

2011

The US office was established. CSUN made it to the Top20 Chinese clean energy companies list of Deloitte. The cell production capacity reached to 600 MW and the panel production capacity increased to 980 MW

2013

CSUN established a cell and panel production plant in Istanbul together with its strong Turkish partner Seul Holding. The cell production capacity increased to 1 GW and the panel production capacity increased to 1,2 GW.

2015

CSUN established the Cell plant in South Korea. The production capacity of the CSUN Eurasia plant increased to 500 MW.

2017

Solar panel production plant with the capacity of 400 MW was opened in Sacramento, the USA.

Why CSUN?

- *10 Years of Product and 25 Years of Performance Guarantee*
- *PID-Free and Positive Power Tolerance*
- *Certified Quality*
- *Special Powerguard Insurance for all Products*
- *Bloomberg "BNEF Tier 1" (the vendor of the highest numberof solar panels in the world) Title*
- *High Module Efficiency and High Power Output*
- *Bankability-cooperation with biggest financial institutions all over the world*

Standards

- Proven efficiency and advanced performance everywhere in the world
- Advanced QC systems and strict tests standarts ensures 100% customer satisfaction.
- Continuous control procedures and results allow track and traceability throughout entire production process.
- High panel efficiency in extreme weather conditions, coastal&desert areas, high temperature and humudity.

CSUN products have got 10 years of mechanical guarantee and 25 years of performance guarantee.

PowerGuard
SPECIALTY INSURANCE SERVICES

Independent from CSUN, the CSUN solar panels also offer the Powerguard insurance.

Long Term Guarantee

The newest performance guarantee for the polycrystalline panels of CSUN

The NEW linear performance guarantee of CSUN

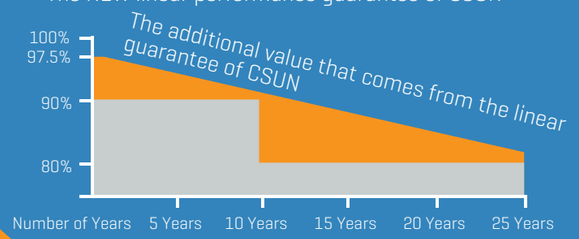

The newest performance guarantee for monocrystalline panels of CSUN

The NEW linear performance guarantee of CSUN

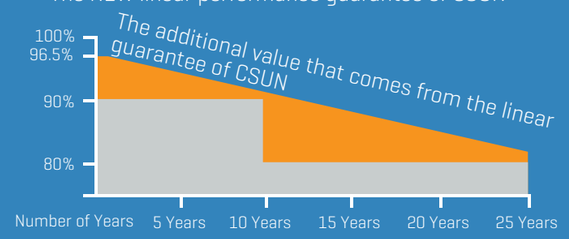

Production Power

As a Global Brand with 6 Production Plants in China Nanjing-Shanghai, Turkey, South Korea, Vietnam and USA and 10 sales offices all over the world, CSUN provides efficient solar energy solutions for sustainable economic development and better future.

World-Class Photovoltaic R&D

Specialized in the production of solar cells and solar panels, CSUN (China Sunenergy) continues its pilot research and development (R&D) activities on the new generation highly efficient crystal silicon cells today in China at full throttle with the support of the International High Technology Research and Development program.

CSUN made world's most efficient crystalline silicon solar cell at 25% conversion rete. We have been the world record holder of C-Si solar cell conversion rate for the past 20 years.

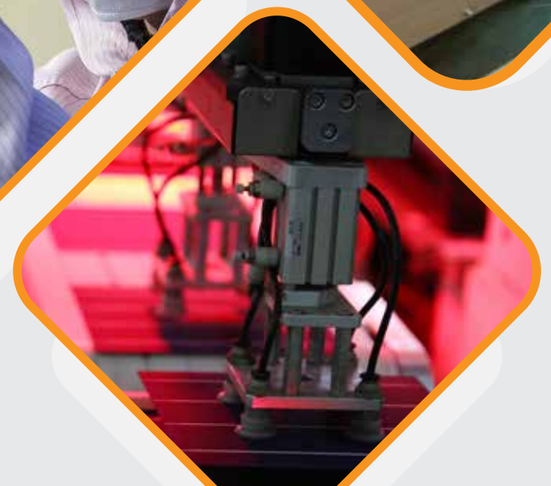

CSUN Production Chain

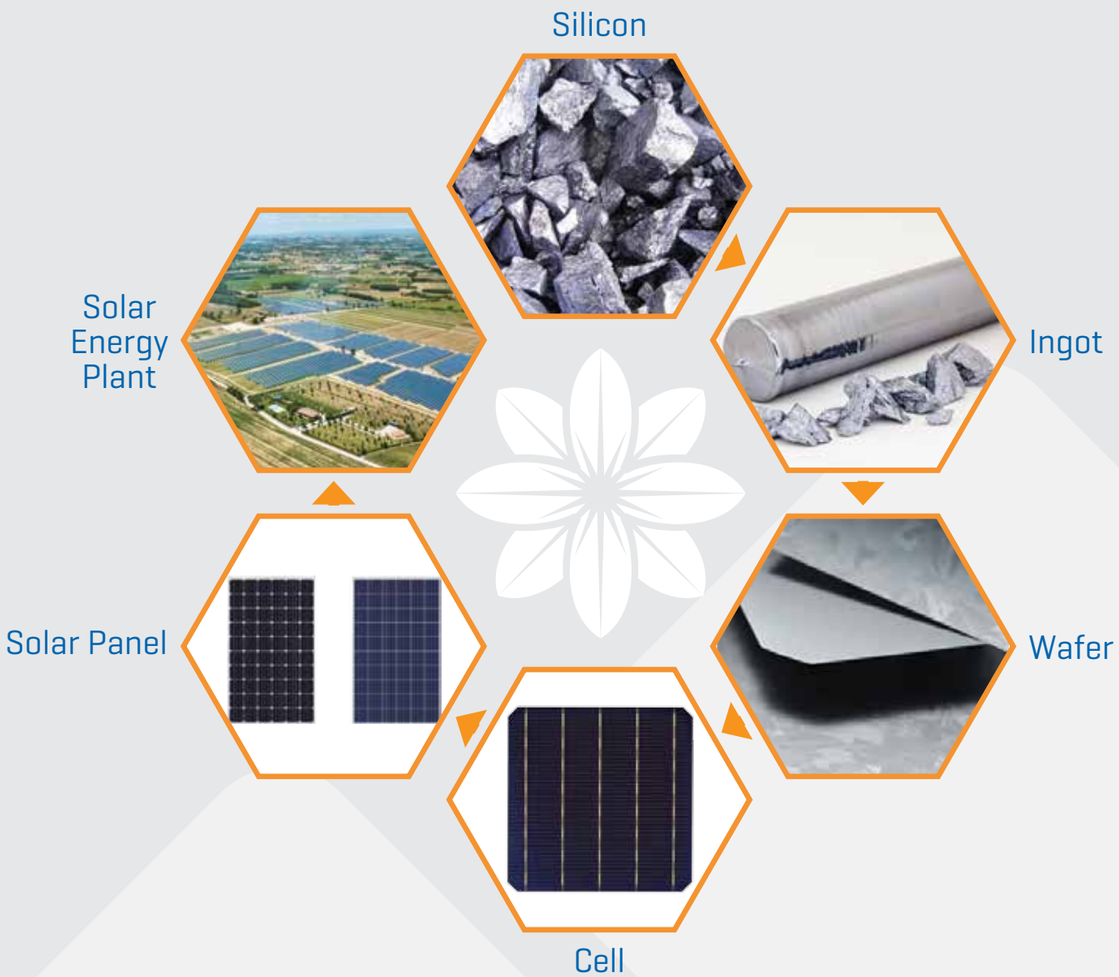

Certificates

Meet International Quality and Assurance

All production lines of CSUN are certified in line with international quality and environment standards (ISO 9001, ISO 14001). Our R&D laboratories are one of the most modern laboratories in the world. All of the CSUN panels have been certified by quality and safety institutions for international usage (IEC 61215 and 61730, UL 1703, MCS)

High Efficiency Technology And Performance

The Best Investment Performance

The value of each and every solar panel is determined based on how much power it could produce throughout its life time. The monocrystalline and polycrystalline panels of CSUN have achieved superior results in the tests performed in the globally renowned laboratories and the projects implemented and the panels displayed outstanding performance.

The CSUN panels used in projects offer investors a positive product experience and the best investment performance.

CSUN Cell Efficiency Road Map

Date	Mono 156-5BB	Mono 156-4BB	Poly 156-5BB	Poly 156-4BB	Mono Perc 156-5BB	Mono Perc 156-4BB
Jun,2017	20,0%	19,8%	18,8%	18,6%	21,2%	21,0%
Dec,2017	20,2%	20,0%	19,0%	18,8%	21,4%	21,2%
Jun,2018	20,4%	20,2%	19,2%	19,0%	21,6%	21,4%
Dec,2018	20,5%	20,4%	19,4%	19,2%	21,8%	21,6%

CSUN PV Module Efficiency Road Map

Date	Mono 60M-5BB	Mono 72M-5BB	Mono 60M-4BB	Mono 72M-4BB	Poly 60P-5BB	Poly 72P-5BB	Poly 60P-4BB	Poly 72P-4BB	Mono Perc 60M-5BB	Mono Perc 72M-5BB	Mono Perc 60M-4BB	Mono Perc 72M-4BB
Jun,2017	280	335	280	335	270	325	265	320	300	355	295	355
Dec,2017	285	340	280	335	275	330	270	325	305	360	300	355
Jun,2018	285	345	285	340	275	330	275	330	305	365	300	360
Dec,2018	290	345	285	345	280	335	275	330	310	370	305	365

MEET CSUN PRODUCTS

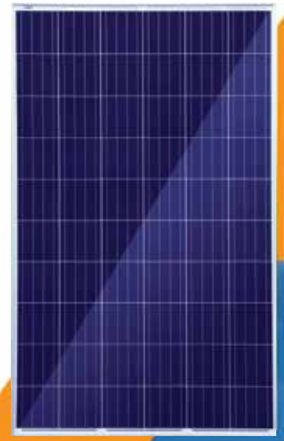

CSUN 60P

High Efficiency Poly Panel

CSUN265-60P CSUN280-60P
CSUN270-60P CSUN285-60P
CSUN275-60P CSUN290-60P

17,86%
Maximum efficiency

265-290W
Power output range

0~+5W
Positive tolerance

25 years
Linear power output warranty
97.5% - 0.7% - 80.7%

Innovative cell and module technology

Positive tolerance offer

Unique 5 busbar design improves reliability of module performance

Certified to withstand wind (2400 Pa) and snow load (5400 Pa)

Passed salt mist & ammonia corrosion, blowing sand and hail testing

Excellent performance under low light conditions

Good temperature coefficient for better output in high temperature regions

Powerguard insurance global coverage

PowerGuard™ SPECIALTY INSURANCE SERVICES

Within the f irst year, the output power shall not be less than 97.5% of the minimum output power in CSUN's product datasheet, thereafter the loss of output power shall not exceed 0.7% per year, ending with 80.7% in the 25th year.

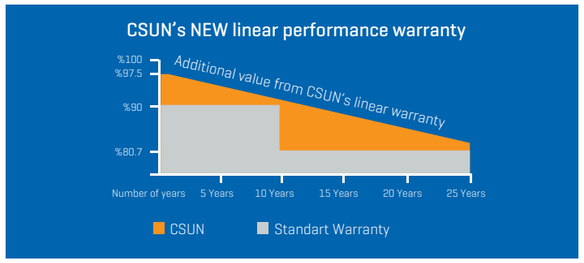

CSUN energy for today

Electrical Characteristics at Standard Test Conditions (STC)

Module	CSUN290-60P	CSUN285-60P	CSUN280-60P	CSUN275-60P	CSUN270-60P	CSUN265-60P
Maximum Power - Pmpp (W)	290	285	280	275	270	265
Positive Power Tolerance	0 ~+5W	0 ~+5W	0 ~+5W	0 ~+5W	0 ~+5W	0 ~+5W
Open Circuit Voltage - Voc (V)	39,04	38,96	38,74	38,45	38,20	37,97
Short Circuit Current - Isc (A)	9,61	9,47	9,34	9,27	9,16	9,09
Maximum Power Voltage - Vmpp (V)	31,87	31,61	31,49	31,20	30,95	30,75
Maximum Power Current - Impp (A)	9,12	9,04	8,89	8,83	8,72	8,64
Module Efficiency	17,86%	17,55%	17,25%	16,94%	16,63%	16,32%

Electrical data relates to standard test conditions (STC) : irradiance 1000W /m2 ; AM 1.5 ; cell temperature 25°C measuring uncertainty of power is within ±3%. Certified in accordance with IEC61215, IEC61730-1/2 and UL 1703

Electrical Characteristics at Normal Operating Cell Temperature (NOCT)

Module	CSUN290-60P	CSUN285-60P	CSUN280-60P	CSUN275-60P	CSUN270-60P	CSUN265-60P
Maximum Power - Pmpp (W)	213	209	206	202	198	195
Maximum Power Voltage - Vmpp (V)	30,01	29,76	29,65	29,38	29,15	28,95
Maximum Power Current - Impp (A)	7,23	7,17	7,05	7,00	6,92	6,85
Open Circuit Voltage - Voc (V)	36,76	36,68	36,48	36,20	35,97	35,75
Short Circuit Current - Isc (A)	7,62	7,51	7,40	7,35	7,26	7,21

Electrical data relates to normal operating cell temperature (NOCT): irradiance 800W /m2; wind speed 1 m/s ; cell temperature 45°C; ambient temperature 20°C measuring uncertainty of power is within ±3%.

Temperature Characteristics

Voltage Temperature Coefficient	-0.292%/K
Current Temperature Coefficient	+0.045%/K
Power Temperature Coefficient	-0.408%/K

Maximum Ratings

Maximum System Voltage (V)	1500
Series Fuse Rating (A)	20
Reverse Current Overload (A)	27

Mechanical Characteristics

Dimensions	1640 x 990 x 35mm
Weight	17.5kg
Frame	Anodized aluminium profile
Front Glass	White toughened safety glass, 3.2mm
Cell Encapsulation	EVA (Ethylene-Vinyl-Acetate)
Back Sheet	Composite film
Cells	6 x 10 polycrystalline solar cells (156.75 x 156.75mm)
Junction Box	Rated Current ≥ 12A, IP ≥ 65, TUV&UL
Cable	Lenght 900mm, 1 x 4mm2
Connector	MC 4 / Compatible with MC 4

Packaging

Container 20'	360 pcs.
Container 40'	840 pcs.
Container 40' HC	910 pcs.

System Design

Temp. Range	-40°C to +85°C
Hail	Max. diameter of 25mm with impact speed of 23m/s
Max. Capacity	Snow 5400Pa, Wind 2400Pa
Application Class	A
Safety Class	II

Dimensions

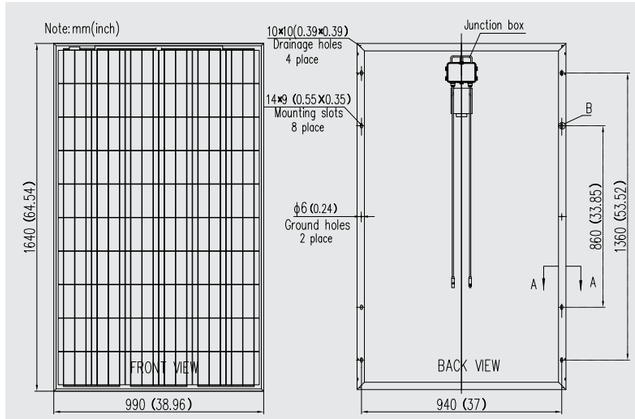

IV-Curves

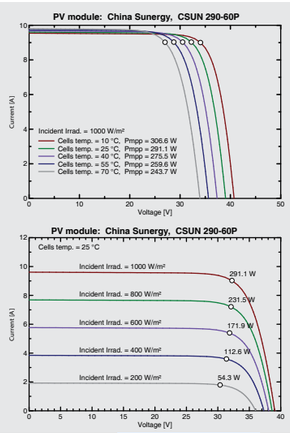

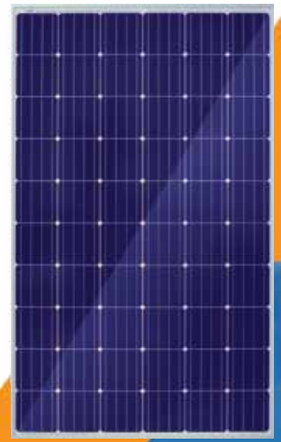

CSUN 60M

High Efficiency Mono Panel

CSUN280-60M CSUN295-60M
CSUN285-60M CSUN300-60M
CSUN290-60M CSUN305-60M

18.79%
Maximum efficiency

280-305W
Power output range

0~+5W
Positive tolerance

25 years
Linear power output warranty
96.5% - 0.68% - 80.18%

Innovative cell and module technology

Positive tolerance offer

Unique 5 busbar design improves reliability of module performance

Certified to withstand wind (2400 Pa) and snow load (5400 Pa)

Passed salt mist & ammonia corrosion, blowing sand and hail testing

Excellent performance under low light conditions

Good temperature coefficient for better output in high temperature regions

Powerguard insurance global coverage

PowerGuard™ SPECIALTY INSURANCE SERVICES

Within the f irst year, the output power shall not be less than 96.5% of the minimum output power in CSUN's product datasheet, thereafter the loss of output power shall not exceed 0.68% per year, ending with 80.18% in the 25th year.

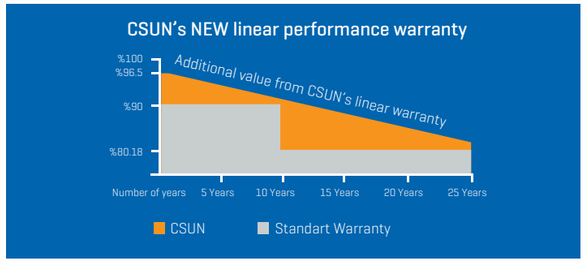

CSUN energy for today

Electrical Characteristics at Standard Test Conditions (STC)

Module	CSUN305-60M	CSUN300-60M	CSUN295-60M	CSUN290-60M	CSUN285-60M	CSUN280-60M
Maximum Power - Pmpp (W)	305	300	295	290	285	280
Positive Power Tolerance	0 ~+5W	0 ~+5W	0 ~+5W	0 ~+5W	0 ~+5W	0 ~+5W
Open Circuit Voltage - Voc (V)	40,01	39,85	39,69	39,42	39,25	39,01
Short Circuit Current - Isc (A)	9,89	9,77	9,65	9,57	9,44	9,35
Maximum Power Voltage - Vmpp (V)	32,79	32,55	32,15	31,87	31,66	31,45
Maximum Power Current - Impp (A)	9,33	9,24	9,19	9,12	9,00	8,91
Module Efficiency	18,79%	18,48%	18,17%	17,86%	17,55%	17,25%

Electrical data relates to standard test conditions (STC) : irradiance 1000W /m2 ; AM 1.5 ; cell temperature 25°C measuring uncertainty of power is within ±3%. Certified in accordance with IEC61215, IEC61730-1/2 and UL 1703

Electrical Characteristics at Normal Operating Cell Temperature (NOCT)

Module	CSUN305-60M	CSUN300-60M	CSUN295-60M	CSUN290-60M	CSUN285-60M	CSUN280-60M
Maximum Power - Pmpp (W)	220	217	213	209	206	202
Maximum Power Voltage - Vmpp (V)	30,55	30,18	29,91	29,72	29,52	29,32
Maximum Power Current - Impp (A)	7,41	7,33	7,29	7,24	7,14	7,07
Open Circuit Voltage - Voc (V)	37,40	37,25	37,00	36,84	36,61	36,48
Short Circuit Current - Isc (A)	7,76	7,66	7,60	7,49	7,42	7,33

Electrical data relates to normal operating cell temperature (NOCT): irradiance 800W /m2; wind speed 1 m/s ; cell temperature 45°C; ambient temperature 20°C measuring uncertainty of power is within ±3%.

Temperature Characteristics

Voltage Temperature Coefficient	-0.307%/K
Current Temperature Coefficient	+0.039%/K
Power Temperature Coefficient	-0.423%/K

Maximum Ratings

Maximum System Voltage (V)	1500
Series Fuse Rating (A)	20
Reverse Current Overload (A)	27

Mechanical Characteristics

Dimensions	1640 x 990 x 35mm
Weight	17.5kg
Frame	Anodized aluminium profile
Front Glass	White toughened safety glass, 3.2mm
Cell Encapsulation	EVA (Ethylene-Vinyl-Acetate)
Back Sheet	Composite film
Cells	6 x 10 monocrystalline solar cells (156.75 x 156.75mm)
Junction Box	Rated Current ≥ 12A, IP ≥ 65, TUV&UL
Cable	Lenght 900mm, 1 x 4mm2
Connector	MC 4 / Compatible with MC 4

Packaging

Container 20'	360 pcs.
Container 40'	840 pcs.
Container 40' HC	910 pcs.

System Design

Temp. Range	-40°C to +85°C
Hail	Max. diameter of 25mm with impact speed of 23m/s
Max. Capacity	Snow 5400Pa, Wind 2400Pa
Application Class	A
Safety Class	II

Dimensions

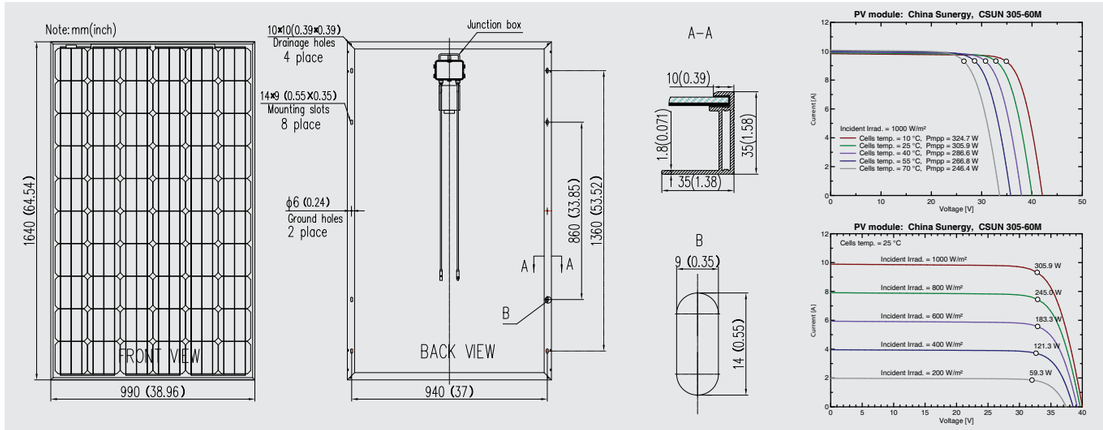

IV-Curves

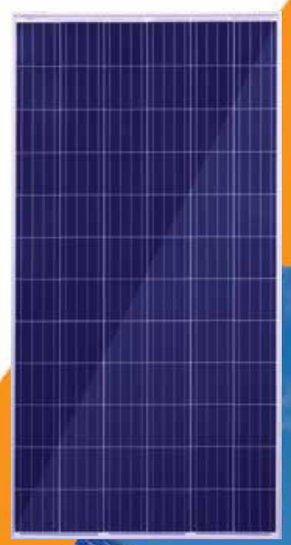

CSUN 72P

High Efficiency Poly Panel

CSUN320-72P CSUN335-72P
CSUN325-72P CSUN340-72P
CSUN330-72P CSUN345-72P

17,82%
Maximum efficiency

320-345 W
Power output range

0~+5W
Positive tolerance

25 years
Linear power output warranty
97.5% - 0.7% - 80.7%

Innovative cell and module technology

Positive tolerance offer

Unique 5 busbar design improves reliability of module performance

Certified to withstand wind (2400 Pa) and snow load (5400 Pa)

Passed salt mist & ammonia corrosion, blowing sand and hail testing

Excellent performance under low light conditions

Good temperature coefficient for better output in high temperature regions

Powerguard insurance global coverage

PowerGuard™ SPECIALTY INSURANCE SERVICES

Within the f irst year, the output power shall not be less than 97,5% of the minimum output power in CSUN's product datasheet, thereafter the loss of output power shall not exceed 0.7% per year, ending with 80.7% in the 25th year.

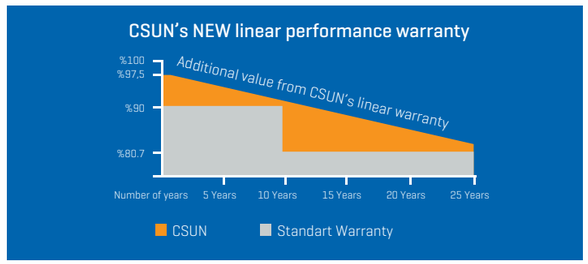

CSUN® energy for today

Electrical Characteristics at Standard Test Conditions (STC)

Module	CSUN345-72P	CSUN340-72P	CSUN335-72P	CSUN330-72P	CSUN325-72P	CSUN320-72P
Maximum Power - Pmpp (W)	345	340	335	330	325	320
Positive Power Tolerance	0 ~+5W	0 ~+5W	0 ~+5W	0 ~+5W	0 ~+5W	0 ~+5W
Open Circuit Voltage - Voc (V)	46,94	46,71	46,49	46,21	46,02	45,89
Short Circuit Current - Isc (A)	9,45	9,39	9,31	9,24	9,15	9,07
Maximum Power Voltage - Vmpp (V)	38,43	38,16	37,95	37,79	37,52	37,34
Maximum Power Current - Impp (A)	8,99	8,93	8,85	8,76	8,68	8,58
Module Efficiency	17,82%	17,56%	17,30%	17,04%	16,78%	16,53

Electrical data relates to standard test conditions (STC) : irradiance 1000W /m2 ; AM 1.5 ; cell temperature 25°C measuring uncertainty of power is within ±3%. Certified in accordance with IEC61215, IEC61730-1/2 and UL 1703

Electrical Characteristics at Normal Operating Cell Temperature (NOCT)

Module	CSUN345-72P	CSUN340-72P	CSUN335-72P	CSUN330-72P	CSUN325-72P	CSUN320-72P
Maximum Power - Pmpp (W)	253	250	246	242	239	235
Maximum Power Voltage - Vmpp (V)	36,19	35,93	35,73	35,58	35,33	35,16
Maximum Power Current - Impp (A)	8,46	8,41	8,33	8,25	8,17	8,08
Open Circuit Voltage - Voc (V)	44,20	43,98	43,77	43,51	43,33	43,21
Short Circuit Current - Isc (A)	7,49	7,44	7,38	7,33	7,25	7,19

Electrical data relates to normal operating cell temperature (NOCT): irradiance 800W /m2; wind speed 1 m/s ; cell temperature 45°C; ambient temperature 20°C measuring uncertainty of power is within ±3%.

Temperature Characteristics

Voltage Temperature Coefficient	-0.292%/K
Current Temperature Coefficient	+0.045%/K
Power Temperature Coefficient	-0.408%/K

Maximum Ratings

Maximum System Voltage (V)	1500
Series Fuse Rating (A)	20
Reverse Current Overload (A)	27

Mechanical Characteristics

Dimensions	1956 x 990 x 50mm
Weight	21.5kg
Frame	Anodized aluminium profile
Front Glass	White toughened safety glass, 3.2mm
Cell Encapsulation	EVA (Ethylene-Vinyl-Acetate)
Back Sheet	Composite film
Cells	6 x 12 polycrystalline solar cells (156.75 x 156.75mm)
Junction Box	Rated Current ≥ 12A, IP ≥ 65, TUV&UL
Cable	Lenght 900mm, 1 x 4mm2
Connector	MC 4 / Compatible with MC 4

Packaging

Container 20'	210 pcs.
Container 40'	504 pcs.
Container 40' HC	552 pcs.

System Design

Temp. Range	-40°C to +85°C
Hail	Max. diameter of 25mm with impact speed of 23m/s
Max. Capacity	Snow 5400Pa, Wind 2400Pa
Application Class	A
Safety Class	II

Dimensions

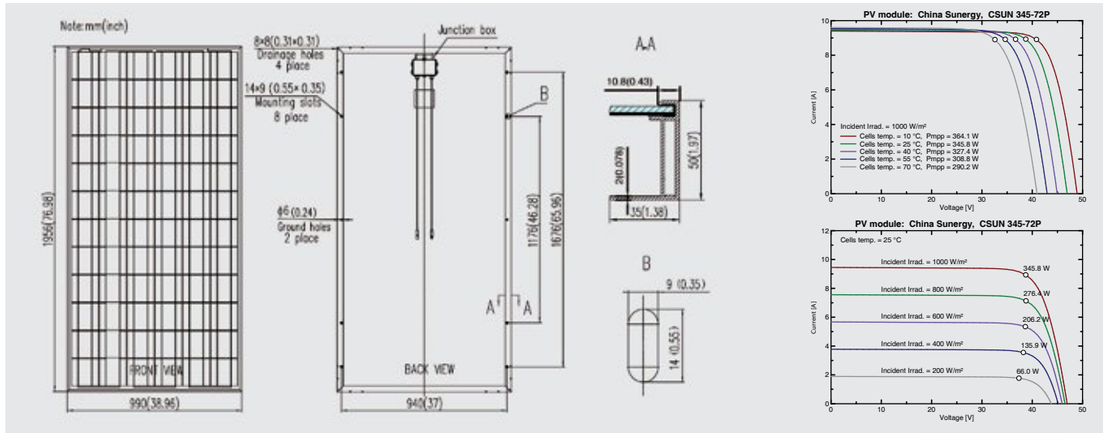

IV-Curves

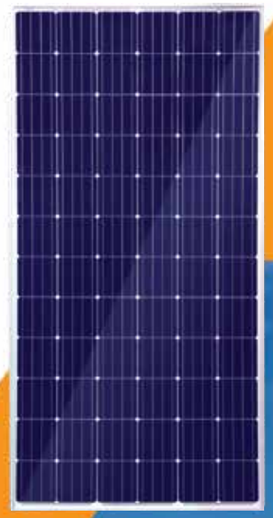

CSUN 72M

High Efficiency Mono Panel

CSUN340-72M CSUN355-72M
CSUN345-72M CSUN360-72M
CSUN350-72M CSUN365-72M

18,85%
Maximum efficiency

340-365W
Power output range

0~+5W
Positive tolerance

25 years
Linear power output warranty
96.5% - 0.68% - 80.18%

Innovative cell and module technology

Positive tolerance offer

Unique 5 busbar design improves reliability of module performance

Certified to withstand wind (2400 Pa) and snow load (5400 Pa)

Passed salt mist & ammonia corrosion, blowing sand and hail testing

Excellent performance under low light conditions

Good temperature coefficient for better output in high temperature regions

Powerguard insurance global coverage

PowerGuard™ SPECIALTY INSURANCE SERVICES

Within the f irst year, the output power shall not be less than 96.5% of the minimum output power in CSUN's product datasheet, thereafter the loss of output power shall not exceed 0.68% per year, ending with 80.18% in the 25th year.

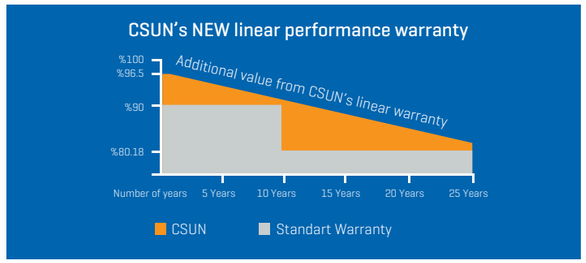

CSUN energy for today

Electrical Characteristics at Standard Test Conditions (STC)

Module	CSUN365-72M	CSUN360-72M	CSUN355-72M	CSUN350-72M	CSUN345-72M	CSUN340-72M
Maximum Power - Pmpp (W)	365	360	355	350	345	340
Positive Power Tolerance	0 ~+5W	0 ~+5W	0 ~+5W	0 ~+5W	0 ~+5W	0 ~+5W
Open Circuit Voltage - Voc (V)	48,26	47,99	47,64	47,5	47,28	47,11
Short Circuit Current - Isc (A)	9,75	9,69	9,63	9,56	9,46	9,37
Maximum Power Voltage - Vmpp (V)	39,59	39,28	39,01	38,72	38,38	38,13
Maximum Power Current - Impp (A)	9,22	9,17	9,10	9,06	9,00	8,93
Module Efficiency	18,85%	18,59%	18,33%	18,07%	17,82%	17,56%

Electrical data relates to standard test conditions (STC) : irradiance 1000W /m2 ; AM 1.5 ; cell temperature 25°C measuring uncertainty of power is within ±3%. Certified in accordance with IEC61215, IEC61730-1/2 and UL 1703

Electrical Characteristics at Normal Operating Cell Temperature (NOCT)

Module	CSUN365-72M	CSUN360-72M	CSUN355-72M	CSUN350-72M	CSUN345-72M	CSUN340-72M
Maximum Power - Pmpp (W)	267	264	260	256	253	249
Maximum Power Voltage - Vmpp (V)	37,16	36,87	36,61	36,34	36,02	35,79
Maximum Power Current - Impp (A)	7,32	7,28	7,22	7,19	7,14	7,09
Open Circuit Voltage - Voc (V)	45,30	45,04	44,71	44,56	44,38	44,22
Short Circuit Current - Isc (A)	7,74	7,69	7,64	7,59	7,51	7,44

Electrical data relates to normal operating cell temperature (NOCT): irradiance 800W /m2; wind speed 1 m/s ; cell temperature 45°C; ambient temperature 20°C measuring uncertainty of power is within ±3%.

Temperature Characteristics

Voltage Temperature Coefficient	-0.307%/K
Current Temperature Coefficient	+0.039%/K
Power Temperature Coefficient	-0.423%/K

Maximum Ratings

Maximum System Voltage (V)	1500
Series Fuse Rating (A)	20
Reverse Current Overload (A)	27

Mechanical Characteristics

Dimensions	1956 x 990 x 50 mm
Weight	21.5kg
Frame	Anodized aluminium profile
Front Glass	White toughened safety glass, 3.2mm
Cell Encapsulation	EVA (Ethylene-Vinyl-Acetate)
Back Sheet	Composite film
Cells	6 x 12 monocrystalline solar cells (156.75 x 156.75mm)
Junction Box	Rated Current ≥ 12A, IP ≥ 65, TUV&UL
Cable	Lenght 900mm, 1 x 4mm2
Connector	MC 4 / Compatible with MC 4

Packaging

Container 20'	210 pcs.
Container 40'	504 pcs.
Container 40' HC	552 pcs.

System Design

Temp. Range	-40°C to +85°C
Hail	Max. diameter of 25mm with impact speed of 23m/s
Max. Capacity	Snow 5400Pa, Wind 2400Pa
Application Class	A
Safety Class	II

Dimensions

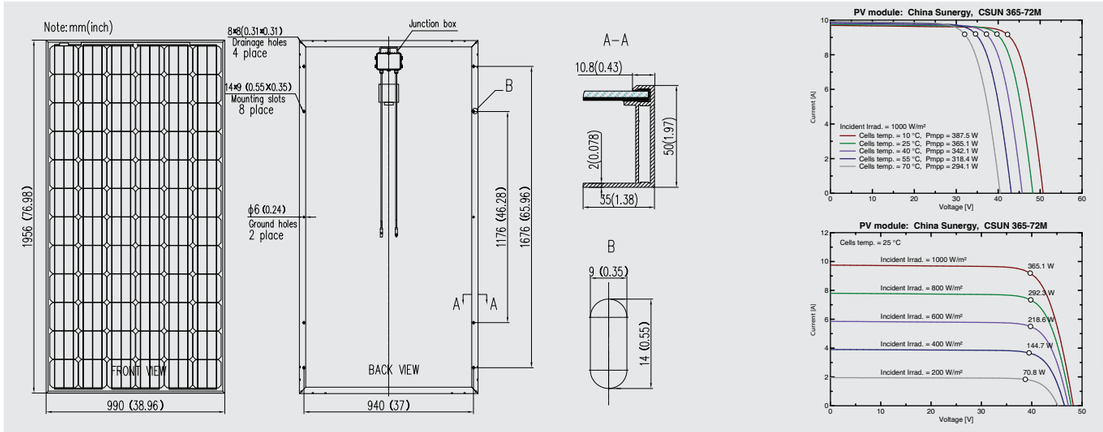

IV-Curves

OUR REFERENCES

CSUN IS EVERYWHERE IN THE WORLD

Philippines Hermosa

System Type: Ground Mounted
System Capacity: 14,5 MWp
Panel Type: CSUN 305-72P

China, Qinghai -Longyangxia Dam

System Type: Ground Mounted
System Capacity: 530 MWp
Panel Type: CSUN 260-60P, CSUN 275-60M, CSUN 285-60M

France, Fontenay, Montajay, Montbeton, etc.

System Type: Ground Mounted
System Capacity: 196 MWp
Panel Type: CSUN 260-60P, CSUN 275-60P

Turkey, Denizli

System Type: Ground Mounted
System Capacity: 630 kWp
Panel Type: CSUN 250-60P

U.K., Cornwall

System Type: Ground Mounted
System Capacity: 10 MWp
Panel Type: CSUN 250-60P

Turkey, Kayseri

System Type: Ground Mounted
System Capacity: 1.1 MWp
Panel Type: CSUN 260-60P

Turkey, Kayseri

System Type: Ground Mounted
System Capacity: 1 MWp
Panel Type: CSUN 260-60P

Turkey, Konya

System Type: Ground Mounted
System Capacity: 4.4 MWp
Panel Type: CSUN 260-60P

Turkey, Ankara

System Type: Ground Mounted
System Capacity: 3.3 MWp
Panel Type: CSUN 260-60P

Turkey, Manisa

System Type: Ground Mounted
System Capacity: 63 kWp
Panel Type: CSUN 260-60P

Turkey, Aksaray

System Type: Ground Mounted
System Capacity: 8.05 MWp
Panel Type: CSUN 250-60P

Turkey, Konya

System Type: Ground Mounted
System Capacity: 1.8 MWp
Panel Type: CSUN 245-60P

Turkey, Istanbul

System Type: Rooftop
System Capacity: 66 kWp
Panel Type: CSUN 265-60M

Turkey, Bitlis

System Type: Ground Mounted
System Capacity: 1 MWp
Panel Type: CSUN 250-60P

Italy, Alessandria

System Type: Ground Mounted
System Capacity: 5.9 MWp
Panel Type: CSUN 235/240-60P

China, Nike Factory

System Type: Rooftop
System Capacity: 147 kWp
Panel Type: CSUN 240-60M

Turkey, Şanlıurfa

System Type: Ground Mounted
System Capacity:: 240 kWp
Panel Type: CSUN 250-60P

Germany, Losten

System Type: Rooftop
System Capacity: 1.5 MWp
Panel Type: CSUN 230-60P

USA, Colorado

System Type: Rooftop
System Capacity: 100 kWp
Panel Type: CSUN 185-72M

China, Nanjing

System Type: Rooftop
System Capacity: 10.7 MWp
Panel Type: CSUN 220-72M
CSUN 250-60M

Germany, Burkau

System Type: Ground Mounted
System Capacity: 4.5 MWp
Panel Type: CSUN 250-60M
CSUN 240-60P

Italy, Terontolo

System Type: Ground Mounted
System Capacity: 11.3 MWp
Panel Type: CSUN 235/240-60P

Turkey, Yozgat

System Type: Ground Mounted
System Capacity: 4,5 MWp
Panel Type: CSUN 260-60P

France, Corsica

System Type: Ground Mounted
System Capacity: 4.5 MWp
Panel Type: CSUN 230/235-60P

France, Dien du Temple

System Type:	Ground Mounted
System Capacity:	1.03 MWp
Panel Type:	CSUN 290-72M

Bulgaria, Sofia

System Type:	Rooftop
System Capacity:	1.1 MWp
Panel Type:	CSUN 230-60P

Jordan

System Type:	Ground Mounted
System Capacity:	1.9 MWp
Panel Type:	CSUN 250-60P

Turkey, Kayseri

System Type:	Ground Mounted
System Capacity:	1.144 MWp
Panel Type:	CSUN 260-60P

Turkey, Kayseri

System Type:	Ground Mounted
System Capacity:	1 MWp
Panel Type:	CSUN 260-60P

Turkey, Nevşehir

System Type:	Ground Mounted
System Capacity:	4,5 MWp
Panel Type:	CSUN 260-60P

CSUN
wherever the sun is

As the biggest solar panel manufacturer in Turkey, we are proud of being all over the word with 33 service points wherever the sun rises...

Headquarter

CSUN – China Sunergy Co., Ltd.
No. 123, West Focheng Road, Jiangning
211100 Nanjing, China
Tel: +86 25 52766666
Fax: +86 25 52766767
E-mail: sales@chinasunergy.com

Plants

Turkey: CSUN Eurasia
Energy Systems Industry and Trade Inc.
Istanbul Industrıal & Free Trade Zone
Akif Kopuz St. No: T-10, B Block, 1st floor,
Aydinli-Tuzla 34957 Istanbul. Turkey
Tel: +90 216 394-0820
Fax: +90 216 394 0830
E-mail: sales@csun.com.tr

US: CSUN – China Sunergy (US) Clean Tech Inc.
2880 Zanker Road, Suite 203,
San Jose, CA 95134, USA
Tel: +1 408 954-7392
E-mail: sales@chinasunergy.com

Vietnam: Sunergy Co., Ltd
Solaireviet Company Limited
47 Ba Cu, Ward 1 Vung Tau, Vietnam.
E-mail: sales@chinasunergy.com

Korea: Sunergy Co., Ltd
1643-6, Oryu-dong, Seo-gu, Incheon-si, Korea
E-mail: sales@chinasunergy.com

Sales Offices

Australia: CSUN Australia Pty Ltd
Level 57 MLC Centre, 19-29 Martin Place,
Sydney NSW 2000, Australia
Tel: +61 292 382024
Fax: +66 2 625 3000
E-mail: sales@chinasunergy.com

EMEA headquarters:
CSUN – China Sunergy Europe GmbH
Schillerstraße 42 – 44,
60313 Frankfurt am Main, Germany
Tel: +49 69 96869766
Fax: +49 69 9686 9769
E-mail: sales@chinasunergy.com

France: CSUN Renewable Energy
2405 Route des Dolines – BP 65,
06560 Sophia Antipolis, France
Tel: +33 4 89 82 92 78
Fax: +33 4 89 82 93 78
E-mail: sales@chinasunergy.com

Japan: CSUN Solar Energy Co., Ltd
2F Amity Suzuki, 3-1-3, Omorikita,
Ota-ku, Tokyo 143-0016 Japan
Tel: +81 03 3298 3335
Fax: +81 03 3298 8766

UK: CSUN HOLDING UK Ltd
Level 30, 40 Bank Street
Canary Wharf
London E14 5NR, United Kingdom
Tel: +44 20 310 29 560
E-mail: sales@chinasunergy.com

Tayland: CSUN Bangkok Office
36/F, CRC Tower, All Season Place,
Wireless Rd., Lumpini, Bangkok 10330
Tel: +66 625 3058-60
E-mail: sales@chinasunergy.com

CSUN®
energy for today

www.csun.com.tr
CSUN Eurasia Energy Systems